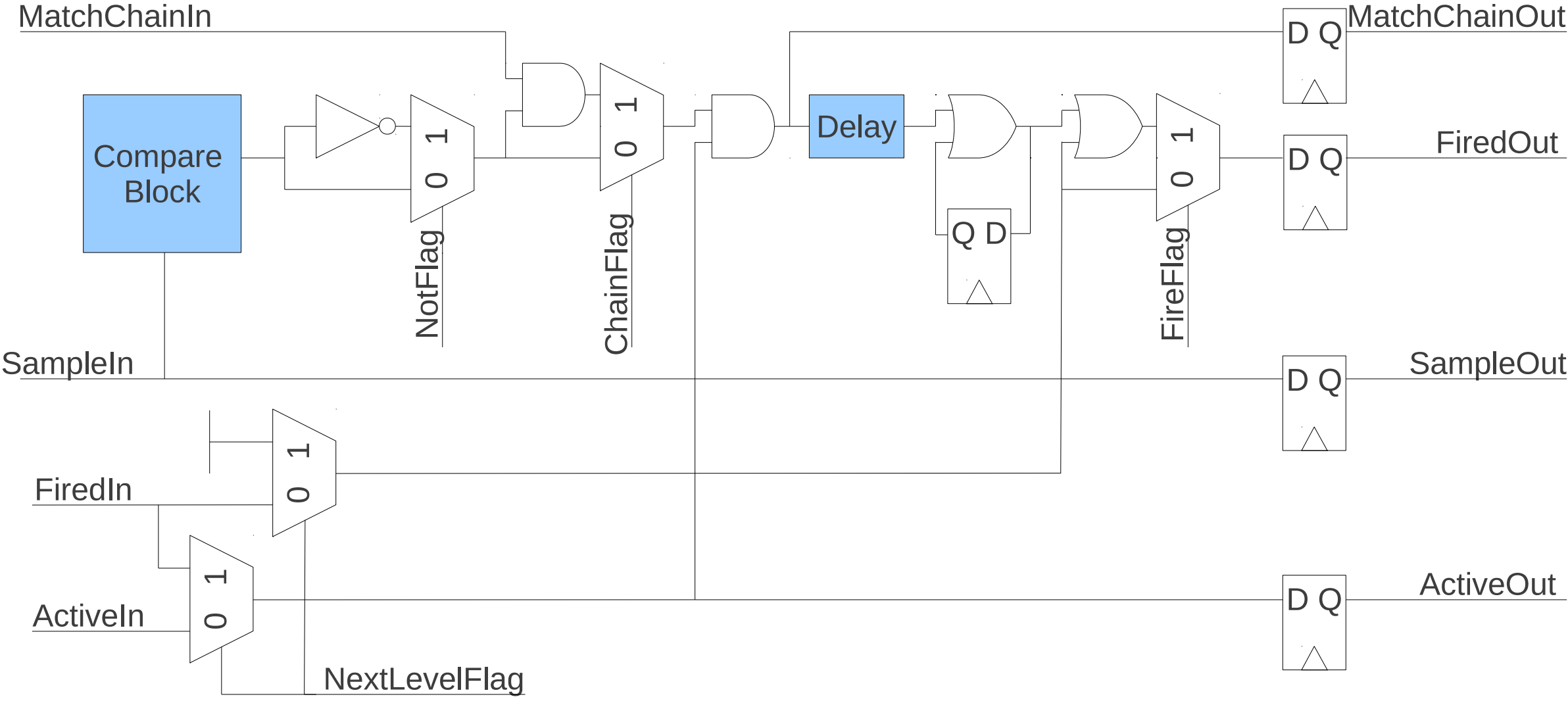
MatchChainIn
MatchChainOut
Compare Block
0 1
NotFlag
0 1
ChainFlag
Delay
Q D
0 1
FireFlag
D Q
FiredOut
SampleIn
D Q
SampleOut
0 1
FiredIn
0 1
ActiveIn
D Q
ActiveOut
NextLevelFlag